Diritti riservati All rights reserved

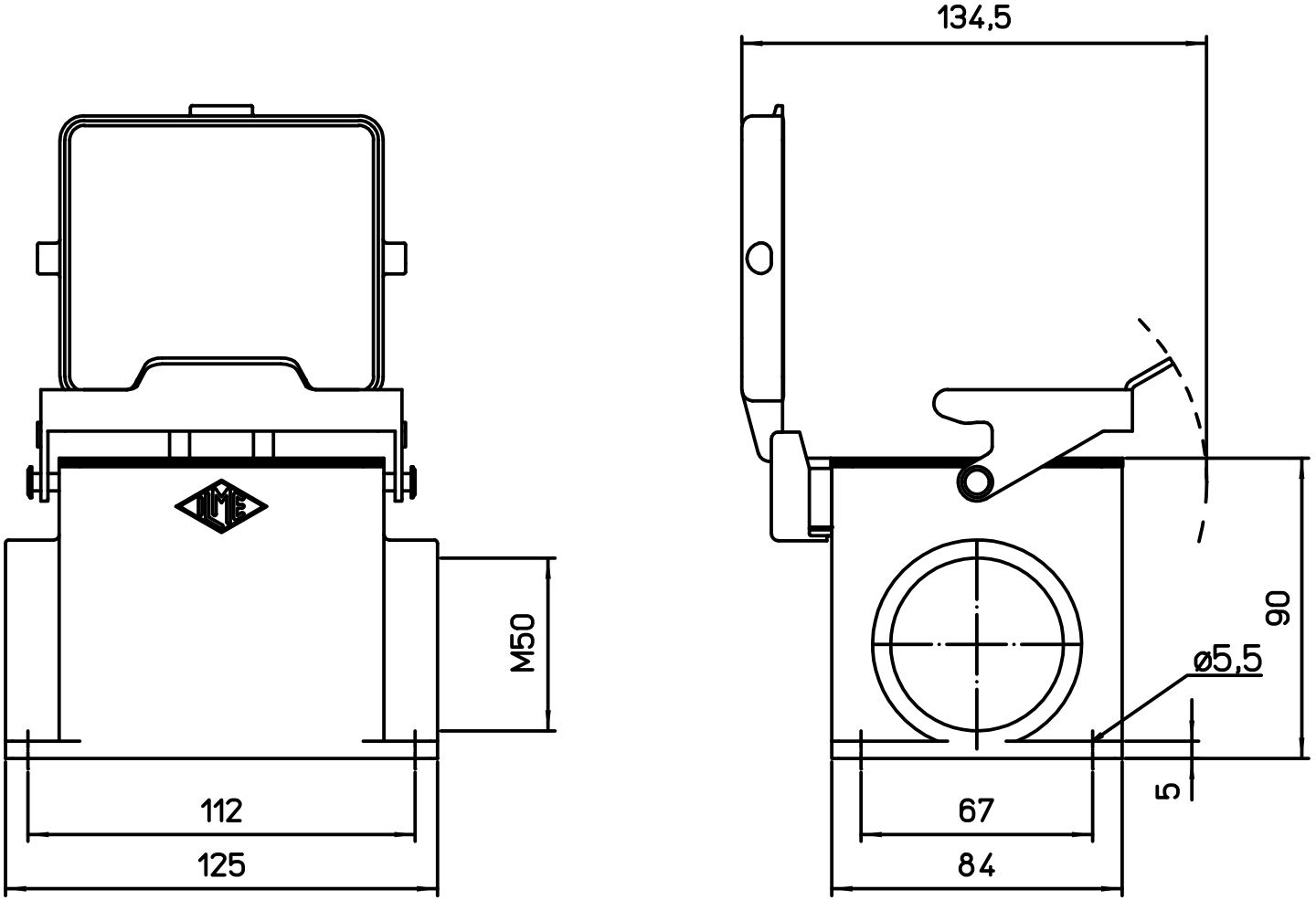

dimensions in mm	
Date	20/03/19
Sign.	Pitasi

MHPX 32 LP50

Surface mounting housing with 1L, insulating cover, M50

Scale 1:2